EasyStart T
Installation instructions.



Comfort Timer
with 7-day preset capability.

Eberspächer

Contents

Introduction Page
- Please read first ... 3
- General information / safety instructions ... 3
- ”Ventilate“ mode ... 3
- Purpose ... 3
- Technical specifications ... 4
- Scope of supply ... 4
- Additional parts (option) ... 4

Installation instructions
- Installation ... 5
  - Install timer ... 5
  - Electrical connection ... 6
  - Install room temperature sensor (optional) ... 6
  - Install external temperature sensor (optional) ... 6
- Combine EasyStart T timer with EasyStart T timer ... 7

Initial commissioning
- Perform initial commissioning ... 8
  - Apply operating voltage ... 8
  - Automatic detection ... 8
  - Set the time and operating time ... 8
  - Configure system ... 9, 10
  - Permissible unit combinations ... 10
  - Test timer ... 10

Miscellaneous
- Reset function ... 11

What to do if ...?
- Displays ... 12
  - ndiA display ... 12
  - Menu item A_D does not appear in the menu bar ... 12
  - Menu item does not appear in the menu bar ... 12

Service ... 12

Diagnosis
- Perform heater diagnosis ... 13
- Display system configuration ... 14

Circuit diagrams
- Parts list circuit diagrams ... 15
- Assignment of the circuit diagrams to the different *AIRTRONIC*, *AIRTRONIC* M and *AIRTRONIC* L heater models ... 15
- Circuit diagrams (at the end of the installation instructions)

Declaration of conformity (at the end of the installation instructions)

Please read first
Before you start to install the timer, please ensure you carefully read through these installation instructions.
These installation instructions contain important information, which you require to install the timer.

General information / safety instructions
In ADR mode, immediate operation without temperature display only is possible.
We recommend installing the temperature sensor available as an option in order to enable use of all the timer's functions.
If the temperature sensor (optional) is connected the heater start is automatically calculated for water heaters.
In air heaters the temperature sensor is used for temperature display.

Important!
Note and comply with the safety instructions and general information given in the heater's documentation and in the EasyStart T operating instructions.

„Ventilate" mode
If the symbol is not displayed in the menu bar, "ventilate" mode is only possible in the heater for the heater models under certain prerequisites:
- With the water heaters HYDRONIC (B / D 4 W S, B / D 5 W S, B / D 4 W SC and B / D 5 W SC): the "heat / ventilate" switch (Order No. 22 1000 31 89 00) must be installed (see Circuit Diagram, Item 3.1.9).
- With the air heaters AIRTRONIC / AIRTRONIC M: the mini controller (Order No. 22 1000 32 07 00) must be installed (see Circuit Diagrams, Item 3.1.17).

"Ventilate" mode is not possible in all other heater models.
In the "ventilate" switch setting of *HYDRONIC* water heaters the vehicle blower is directly controlled by bypassing heat mode and in *AIRTRONIC* air heaters the heater's blower is bypassed in the same way.

Please note!
"Ventilate" or "heat" mode **must be selected before switching on** the heater.
- "Ventilate" mode is not provided for upgraded independent heaters.
- If you have any further questions about "ventilate" mode, please call the service phone number (see page 12).
- The circuit diagrams are at the end of these installation instructions.

Purpose

The EasyStart T timer is used to switch on / off and preset the switching-on time, operating time and operating mode of the heater and / or add-on unit installed in the vehicle

Please note!
Improper use and use outside the specified area of use cancels all liability and warranty.

Technical specifications

Operating voltage: 12 V / 24 V
Dimensions: 36 x 51 x 10.5 mm
Operating temperature: –40 °C to +80 °C
LCD: readability is ensured from –20 °C to +60 °C.

Please note!

At temperatures below –10 °C the display becomes sluggish, i.e. the flashing sequence is slower.

Scope of supply

1 12 V / 24 V timer
1 Cap
1 Fixing screw
1 Base
1 Flat connector housing
9 Junior Power Timer push on sleeve
1 Push on sleeve housing
2 Locking clasps
1 Drilling template

Additional parts (option)

– Room temperature sensor
(Order No.: 22 1000 32 49 00)
– External temperature sensor
(Order No.: 25 1482 89 41 00)
– “ON / OFF” button
(Order No.: 22 1000 32 84 00)
– Console
(Order No.: 22 1000 51 32 00)

Installation

Install timer

Install the timer in a suitable place on the dashboard within the driver's line of vision and connect according to the sketch and circuit diagrams at the end of this documentation.

- Use the self-adhesive drilling template provided to position and drill the holes. Remove the drilling template when you have finished drilling.
- If necessary, the foam pad base can be used to balance out any unevenness. To do this, pull off the protective plastic sheet and stick the base onto the timer.
- Feed the heater lead harness through the ø 8 mm drill hole.
- Preassemble the timer with expansion plug in the ø 6.5 mm drill hole.
- If the foam pad base is used, pull off the second protective plastic sheet too.
- Push or screw the fixing screw into the expansion bolt to fasten the timer .
- Pull off the protective plastic sheet on the cap and stick in the cap.
- Fix the flat connector of the timer lead harness in the 9-pin flat connector housing.
- Push in the locking clasp at the flat connector housing.

Please note!

- Only install the timer inside the vehicle.
- When selecting the installation position, ensure the display is clearly visible, if necessary use the console (optional).

Installation

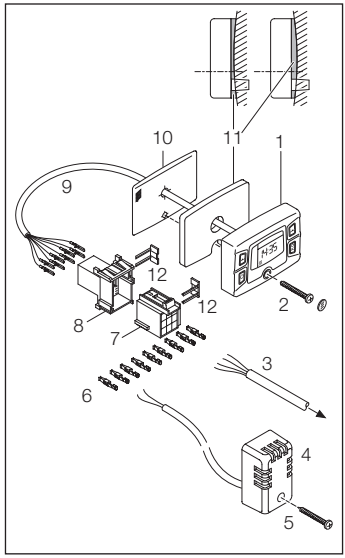

1 Timer
2 Fixing screw with cap
3 Lead harness to heater
4 Room temperature sensor (optional)
5 Self-tapping screw C2.9 x 19 (1x, optional)
6 Push on sleeves (9x)
7 Push on sleeve housing
8 Flat connector housing
9 Timer lead harness
10 Drilling template
11 Foam pad base
12 Locking clasps

Electrical connection

Crimp the push on sleeves onto the heater lead harness (if necessary) and the room temperature sensor (optional) and tie into the 9-pin receptacle housing (see circuit diagrams at the end of these installation instructions).
Push in the locking clasp at the push on sleeve housing.
Connect the push on sleeve and flat connector housing.

Please note!

Do not insert the fuse in the fuse holder yet.

Install room temperature sensor (optional)

Fix the room temperature sensor (Order No.: 22 1000 32 49 00 inside the vehicle using the screw supplied (5), so that the representative interior temperature is measured.
Do not place the room temperature sensor within the sun's radiation range, near to the vehicle heater's outlet jets or in the footwell.
Recommendation:
The room temperature sensor should be installed at seat level in the centre console.

Install external temperature sensor (optional)

Instead of the room temperature sensor, you can install an external temperature sensor (Order No.: 25 1482 89 41 00) to measure the ambient temperature.
The external temperature sensor must be installed in an area where temperature measurement is not affected by heat given off by the vehicle's engine or the exhaust system or by severe soiling.
Connection of the external and room temperature sensor is identical (see circuit diagrams at the end of these installation instructions).

Please note!

Only one sensor, either the room or the external temperature sensor, can be connected.

Combine EasyStart T timer with EasyStart T timer

Mount one timer inside the vehicle as described on page 5 under „install timer“. Fix the second time in the same way, e.g. on the side or rear panel of the driver‘s or sleeper cabin and connect (see circuit diagrams at the end of the installation instructions).

Please note!

- If 2 timers are combined, the timer with the connected heater cable loom (universal design) and the connected diagnosis cable (bl/ws) takes on the master function, i. e all timer functions and settings are possible.
  The diagnosis query and settings in the workshop menu cannot be performed at the second timer connected to the master.
  Option
  If a diagnosis cable (bl/ws) is not connected, a room or external temperature sensor can be connected instead (see circuit diagrams, Item 2.15.1 or 2.15.9)
- **Note on heater models with two diagnosis cables**
  (only for AIRTRONIC / AIRTRONIC M and control units cable loom wound with cable tape).
  If a heater cable loom (universal design) is not used for these heater models, you must install a connection from the diagnosis cable (bl/ge) in the 16-pin heater connector S1, chamber 8 to the timer, 9-pin connector S1, chamber 5.
- Before starting up for the first time, disconnect both timers from the power supply for 5 seconds.
- The displays of the timers are automatically aligned with each other.

Initial commissioning

Perform initial commissioning

The following steps must be performed consecutively during the initial commissioning.

- **Apply operating voltage**
  The operating voltage is applied by inserting the fuse in the fuse holder.
  Automatic detection
  Five seconds after the operating voltage is applied, ini appears on the display
  The timer checks which type of heater is connected and configures the menu bar.

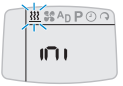

- **Set the time and operating time.**

Select weekday with ⌃ or ⌄.
Confirm selection with OK.

Set hours with ⌃ or ⌄.
Confirm setting with OK.

Set minutes with ⌃ or ⌄.
Confirm setting with OK.

Permanently set operating time for immediate operation with ⌃ or ⌄.
Confirm setting with OK.

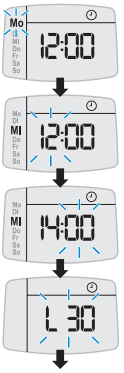

The setting of the time and operating time is finished.



- **Configure system**

The system must be configured depending on the application.



press until the menu bar appears in the display and the temperature is displayed.

Select symbol using or .
then briefly press **and** **simultaneously**.

Confirm menu **P1** with .

Select the submenu **C1** or **C2** using or and confirm with .
The submenu **C1** has been selected:
After they have been set to "of" or "on" using or have been selected using or and confirmed with , the individual menu items are successively displayed.
Please follow the notes on menu items given on page 8.

00	Add-on unit **AD** (see table of „permissible unit combinations")	of / on
01	Temperature unit	of for °C / on for F
02	Language / weekdays	of for DE / on for EN
03	Time display format	of for 24h on for AM / PM
04	– – –	of
05	Upgrade box mode	of / on
06	In water heater, use or to change vehicle engine capacity, e.g. 18 = 1800 ccm	10 – 40 or of (automatic calculation of the operating period is deactivated).
	In air heater	of
07	Automatic runtime calculation, change operating period with or	10 – 60

Continued on page 10

Configure system (continued)

The data is transferred if the menu item C1 / 07 has been confirmed with OK. Then the time is displayed.



The system configuration is finished.

Notes on the menu items

04

- These menu items are not to be used for the current heaters and must be set to ”of“.

05

- This menu item only applies to heaters in the function as an independent heater and with JE diagnosis.

06

In air heaters:

- This menu item must be set to ”of“ in air heaters.

In water heaters:

- If the valve 25 2014 80 62 00 or 25 2014 80 72 00 is used in the water circuit, the engine capacity given can be reduced by 500 cm³.
- If more heat is required the engine capacity given can be increased by 500 cm³.

Please note!

The values for the increase and reduction of the engine capacity information only apply to cooling water circuits whose vehicle blower heat exchanger is flowed through before the vehicle's engine.

07

- If the vehicle is only used on short routes the maximum operating time must be reduced in agreement with the customer.

Permissible unit combinations

Unit 1 connected to the diagnosis cable	**Unit 2** connected to the switching output
Air heater with JE Diagnosis (control boxes with second diagnosis cable)	**Water heater** Diagnosis not connected
Air heater with JE Diagnosis (control boxes with second diagnosis cable)	e.g. **Parking air conditioning**

- **Test timer**
  – Switch heater on and off.
  If an error occurs, see chapter ”What to do if …?“ from page 12 onwards.

Reset function

The reset function is used to reset the timer to the factory settings.

press until the menu bar appears in the display and the temperature is displayed.

Select symbol using or .
then briefly press **and** **simultaneously**.

Menu **P1** is displayed.

Select reset function using or and confirm with .

The timer is reset to the factory settings.



Please note!

All timer settings are lost.
Heating mode is terminated.

What to do if ...?

Displays

Display 

- No diagnosis cable connected.
- No diagnosis data available at present. Repeat query.

Menu item AD does not appear in the menu bar
- No unit with JE diagnosis connected to the diagnosis cable.

Menu item does not appear in the menu bar
- "Ventilate“ mode has not been activated or is not available for this heater model (see page 3).

- Further displays are described in the chapter "What to do if …?“ from page 22 of the operating instructions.

Please note!

If you are unable to remedy the fault or error, please contact an authorised JE workshop or dial one of the service phone numbers given below.

Service

Hotline

If you have any technical questions, a problem with your timer or the heater, dial the following service phone number:

Telephone hotline
00 49 (0)800 / 12 34 300

Fax hotline
00 49 (0)1805 / 26 26 24

Outside of Germany, please contact the respective national Eberspächer service agent.

Perform heater diagnosis

Activate mobile unit.

Confirm symbol with OK.

Heater is switched on.

Confirm operating time with OK.

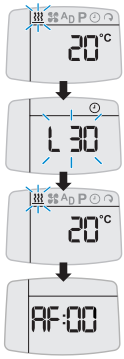

and : simultaneously press briefly.

The following actions are possible

- Call up error memory.
  Use or to call up the error memory F1 – F5.
- Call up error memory again.
  and : simultaneously press briefly.
- Delete fault memory (dEL display)
  OK press.

  Press OK again.

  The diagnosis is completed.

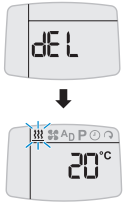

Diagnosis

Display system configuration

Select submenu **C2** as described on page 7.
After they have been conformed with OK, the individual menu items are displayed step by step.



00	Heater type	0 = unknown unit 1 = Air heater 2 = Water heater 3 = Add-on unit
01	Diagnosis	0 = – – – 1 = None 2 = Free running 3 = JE diagnosis
02	Ventilation function	of / on
03	Temperature sensor installed	of / on
04	Upgrade box mode	of / on
05	ADR function	of = evaluation Terminal 58 on = ADR mode

Parts list circuit diagrams

2.15.1 Room temperature sensor (optional)
2.15.9 External temperature sensor (optional)

3.1.7 "ON / OFF" button
3.1.9 "Heat / ventilate" switch
3.1.11 "Round" control unit
3.1.16 Radio remote control button
3.1.17 "Mini controller" control unit

3.2.15 **EasyStart T** timer

a) Connection of control units at the heater
c) Terminal 58 (lighting)
d) Parking ventilation with vehicle blower (optional)
e) **EasyStart T** timer connection
g) External "ON / OFF" button (optional
x) ADR jumper
y) Connect and insulate cables

Please note!

- The timer must be connected as shown in the circuit diagrams at the end of the installation instructions.
- **Note heater type!**
- Insulate unused cable ends. Connectors and bush housings are shown from the cable inlet side.
- You must definitely create the jumper marked in the circuit diagram with y).

Cable colours

sw	= black	vi	= violet
ws	= white	br	= brown
rt	= red	gr	= grey
ge	= yellow	bl	= blue
gn	= green	li	= purple

Assignment of the EasyStart T circuit diagrams to the different *AIRTRONIC*, *AIRTRONIC* M and *AIRTRONIC* L heater models

The circuit diagrams are assigned via the installed control box:
Circuit diagrams 25 2069 00 97 08 A and 25 2069 00 97 09 A are valid for heater models

- with a diagnosis cable bl/ws, which is connected to the 16-pin heater connector S1, in chamber 8.
- with a control unit cable loom, which is firmly sealed in.

Circuit diagrams 25 2361 00 97 03 A and 25 2361 00 97 04 A are valid for heater models

- with 2 diagnosis cables, which are connected to the 16-pin heater connector S1
  - OEM diagnosis cable bl/ws in chamber 3,
  - Diagnosis cable, universal design bl/ge in chamber 8.
- with a control unit cable loom, which is wound with cable tape.

Pin assignment EasyStart T-connector S1		
1	Terminal 30 (positive)	rt
2	S+ (switching on signal)	ge
3	Terminal 31 (negative)	br
4	DAT cable	vi
5	Diagnosis cable (K line)	bl/ws
6	Terminal 58	gr/sw
7	Temperature sensor (positive)	gr
8	Temperature sensor (negative)	br/ws
9	– –	– –

Circuit diagrams

AIRTRONIC / *AIRTRONIC* M

Please note!

This circuit diagram is valid for heaters with one diagnosis cable and a control unit cable loom wich is firmly encapsulated.

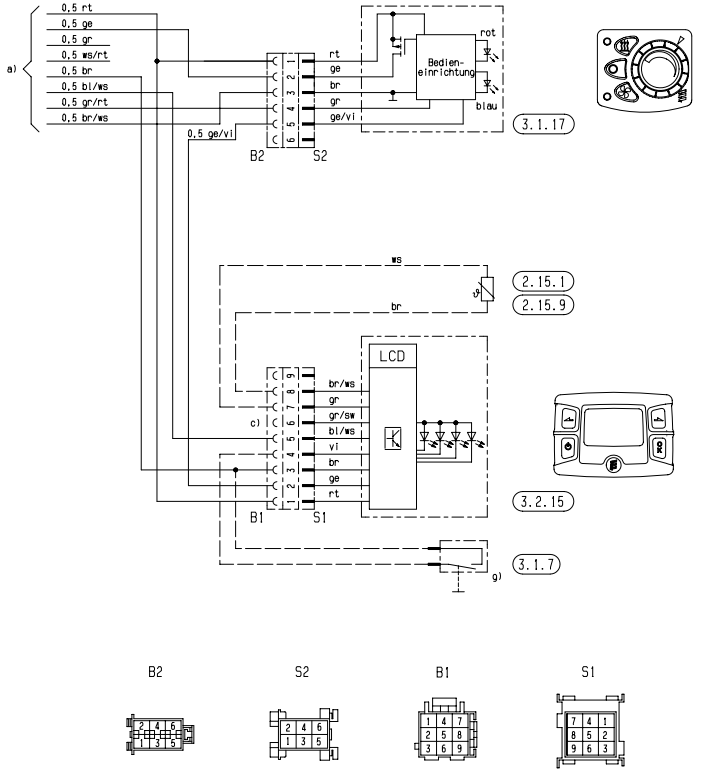

Parts list page 15

AIRTRONIC / *AIRTRONIC* M – ADR

Please note!

This circuit diagram is valid for heaters with one diagnosis cable and a control unit cable loom wich is firmly encapsulated.

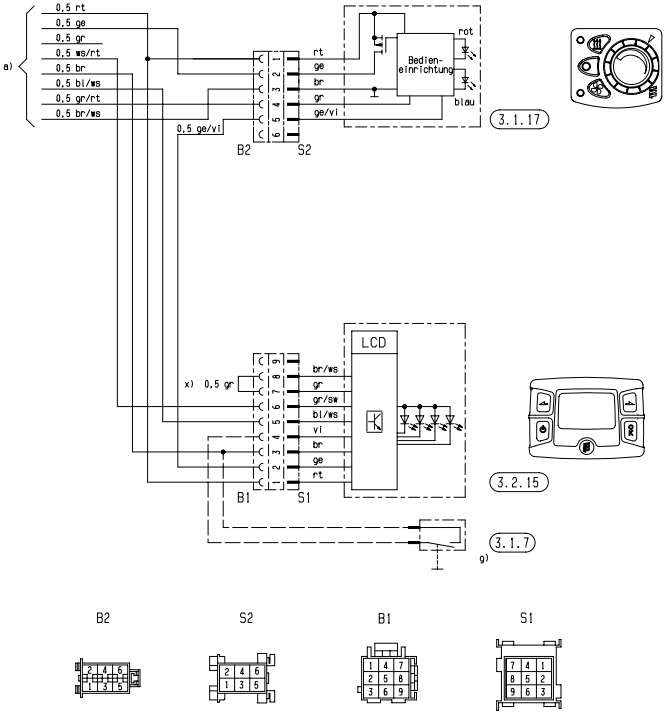

Parts list page 15

Circuit diagrams

AIRTRONIC / *AIRTRONIC* M / *AIRTRONIC* L

Please note!

This circuit diagram is for heaters with 2 diagnostics cable and whose control box cable loom is wound with cable tape.

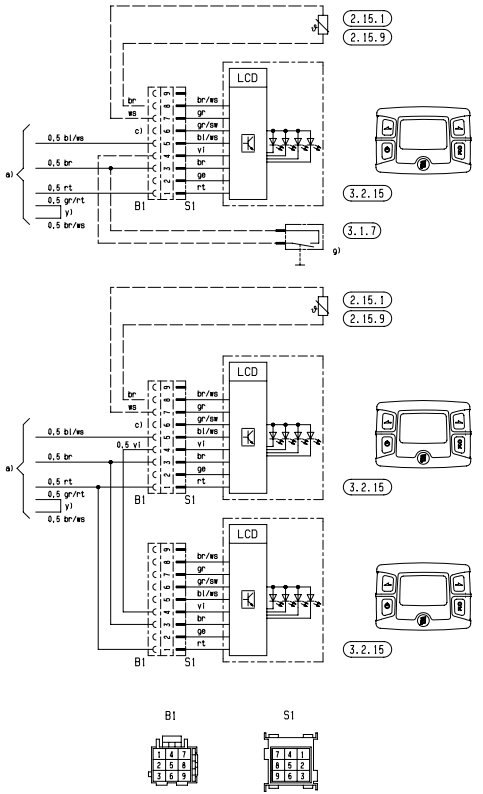

Parts list page 15

25 2361 00 97 03 A

AIRTRONIC / *AIRTRONIC* M / *AIRTRONIC* L – ADR

Please note!

This circuit diagram is for heaters with 2 diagnostics cable and whose control box cable loom is wound with cable tape.

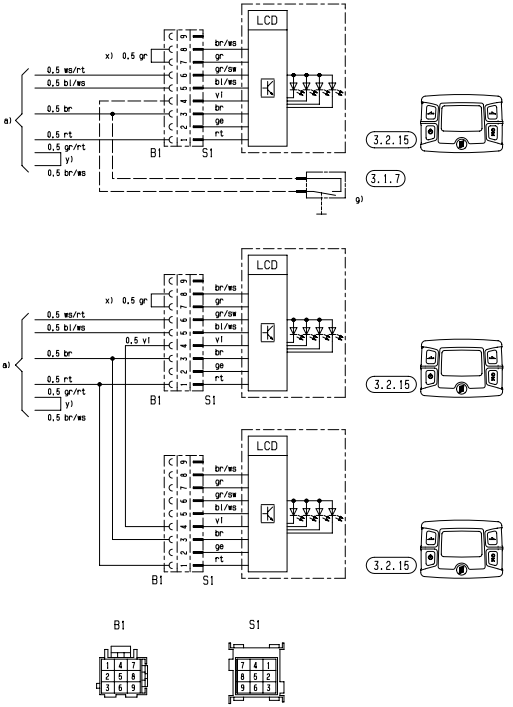

Parts list page 15

Circuit diagrams

Air heater D 8 LC

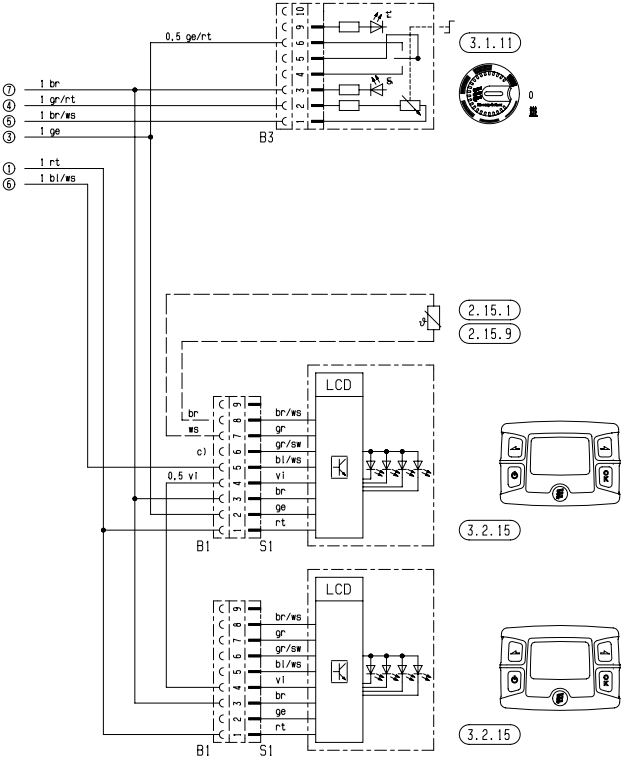

Parts list page 15

Air heaterD 8 LC

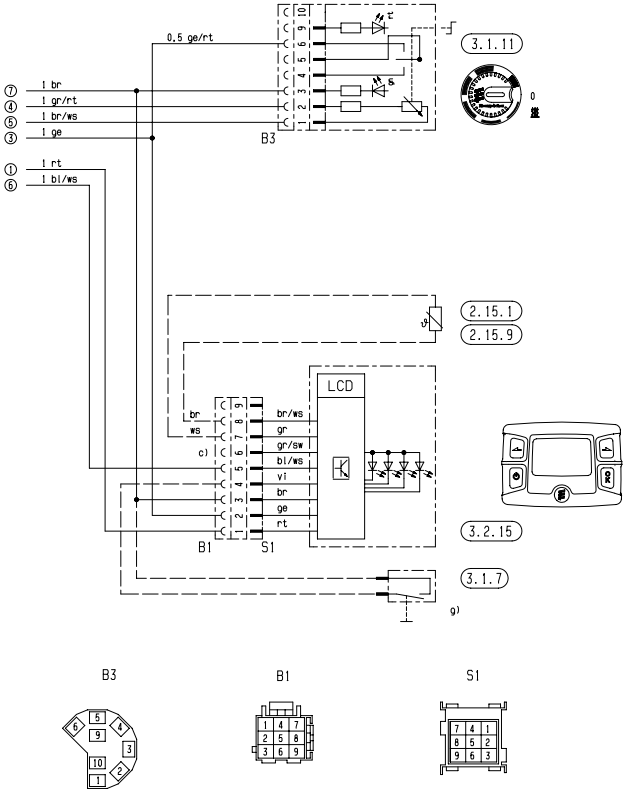

Circuit diagrams

***HYDRONIC* B 4 W S / D 4 W S**
***HYDRONIC* B 5 W S / D 5 W S**

***HYDRONIC* B 4 W SC / D 4 W SC**
***HYDRONIC* B 5 W SC / D 5 W SC**

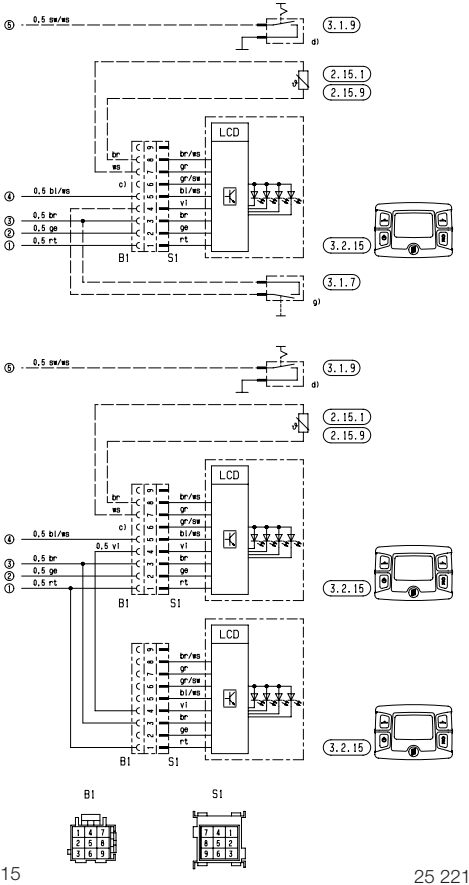

Parts list page 15

HYDRONIC D 5 W S / D 5 W SC – 24 V – ADR

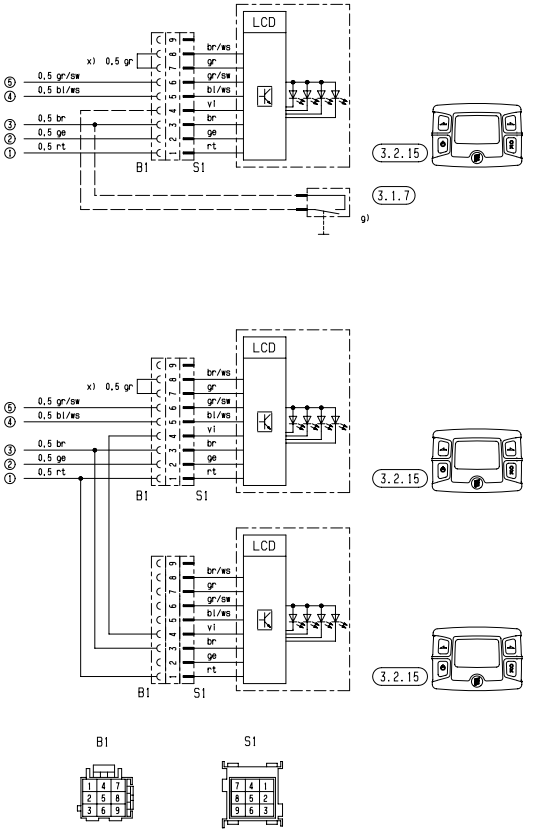

Parts list page 15

Circuit diagrams

***HYDRONIC* M**

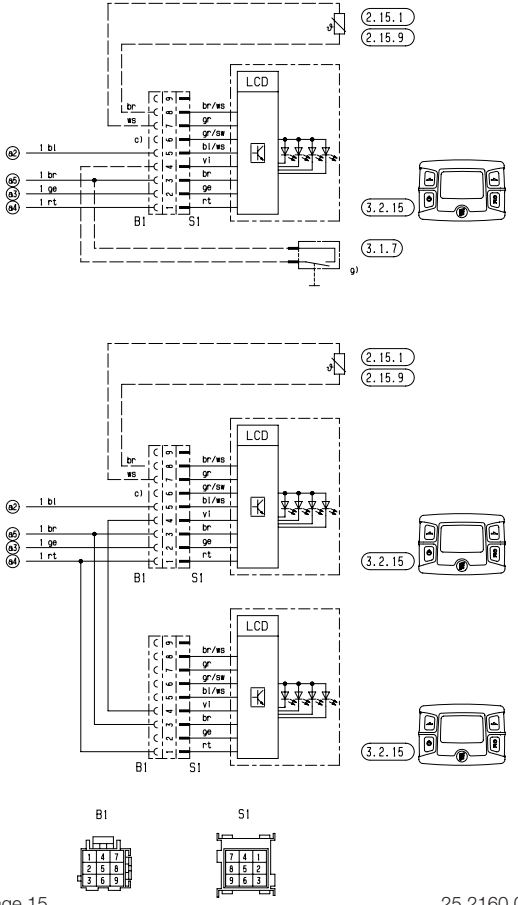

Parts list page 15

***HYDRONIC* M – ADR**

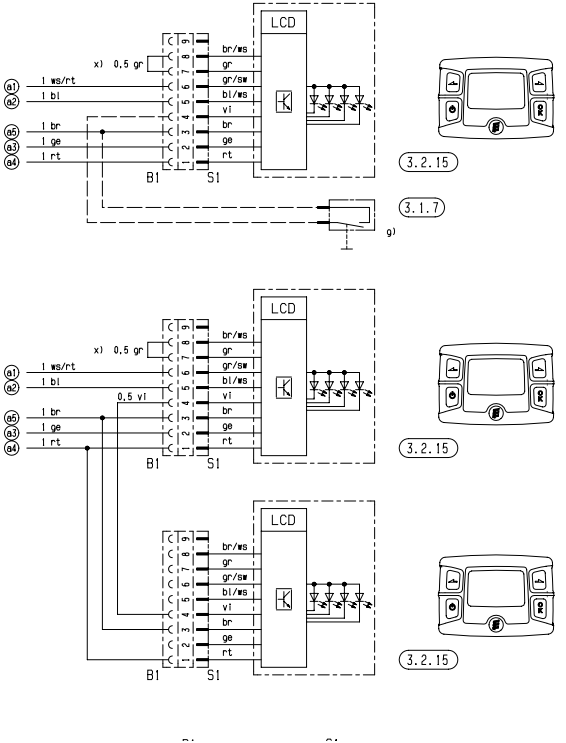

***HYDRONIC* L**

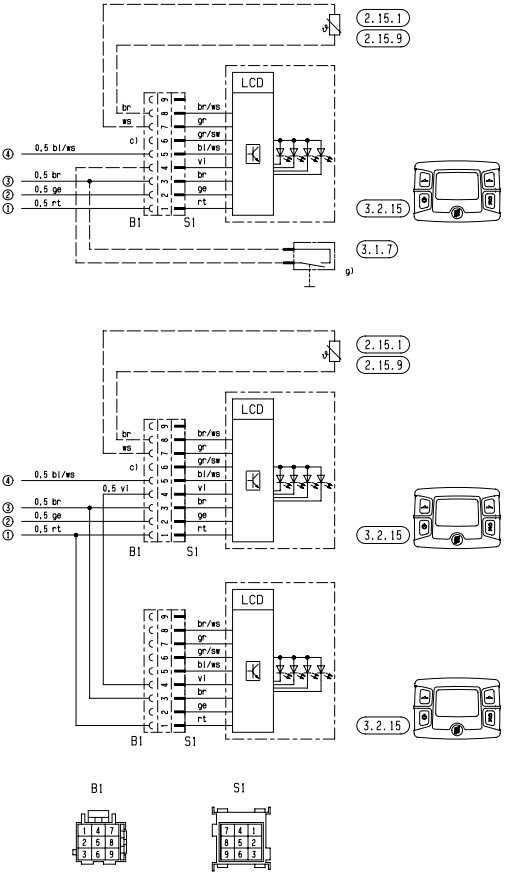

Parts list page 15

EU-Konformitätserklärung
EC-Declaration of Conformity

Hersteller / Verantwortliche Person:
Manufacturer / responsible person: Teltronic AG, Klaus von Arx

Adresse / Address:
Gewerbestrasse 9
CH-4562 Biberist
Schweiz

Erklärt, dass das Produkt / Declares that the product:

Typ / type: Komfort Schaltuhr

Modell / model: EasyStart T

Verwendungszweck /:
Intended use: Standheizungseinschaltung

bei bestimmungsmäßiger Verwendung den grundlegenden Anforderungen gemaß Artikel 3 der R&TTE-Richtlinie 1999/5/EG entspricht und daß die folgenden Normen angewandt wurden:
complies with the essential requirements of Article 3 of the R&TTE 1999/5/EC Directive, if used for its intended use and that the following standards has been applied:

1 Gesundheit (Artikel 3.1.a der R&TTE-Richtlinie)
Health (Article 3.1.a of the R&TTE Directive)

angewendete Norm(en) / applied standard(s): **not applicable** — Ausgabe / issue: _____

2 Sicherheit (Artikel 3.1.a der R&TTE-Richtlinie)
Safety (Article 3.1.a of the R&TTE Directive)

angewendete Norm(en) / applied standard(s): **EN 60950** — Ausgabe / issue: **1997-11**

3 Elektromagnetische Verträglichkeit (Artikel 3.1.b der R&TTE-Richtlinie)
Electromagnetic compatibility (Article 3.1.b of the R&TTE Directive)

angewendete Norm(en) / applied standard(s): **2004/104/EG** — Ausgabe / issue: **2004-10**

4 Effiziente Nutzung des Funkfrequenzspektrums (Artikel 3.2 der R&TTE-Richtlinie)
efficient use of the radio frequency spectrum (Article 3.2 of the R&TTE Directive)

angewendete Norm(en) / applied standard(s): **not applicable** — Ausgabe / issue: _____

Biberist, 05.08.2005
(Ort und Datum der Konformitätserklärung)
(Place and date of the declaration of conformity)

K. von Arx
(Name und Unterschrift)
(Name and signature)

www.eberspaecher.com

J. Eberspächer
GmbH & Co. KG
Eberspächerstraße 24
D-73730 Esslingen
Telefon 0711 939-00
Telefax 0711 939-0643
info@eberspaecher.com

Eberspächer

22 1000 32 88 07 07.2006 We reserve the right to make changes Printed in Germany © J. Eberspächer GmbH & Co. KG